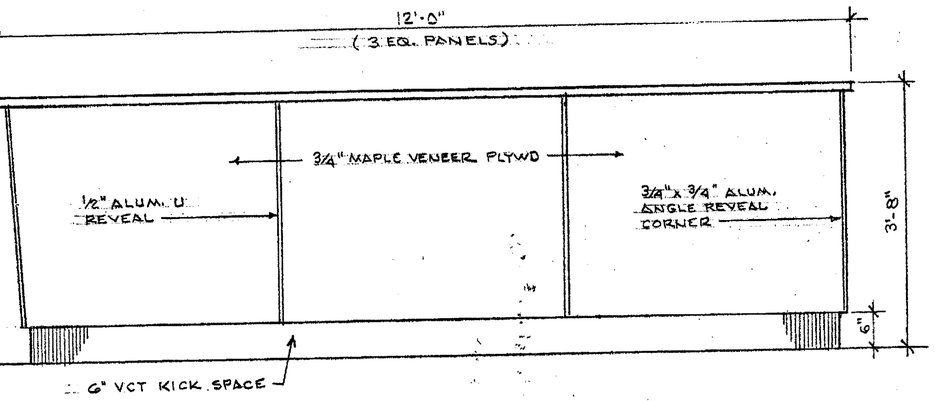

NURSES STATION - FRONT ELEVATION 3/4"=1'-0"

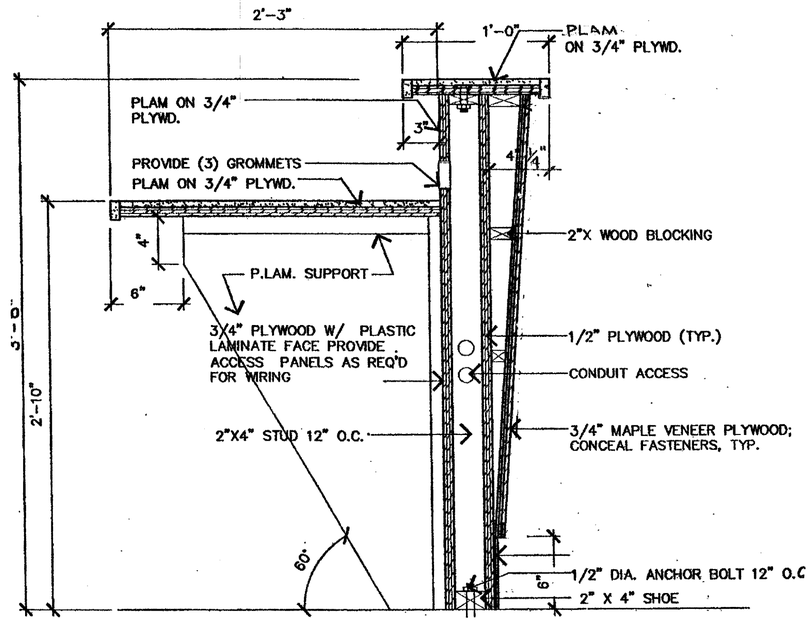

NURSES STATION DESK - SECTION

1 1/2"=1'-0"

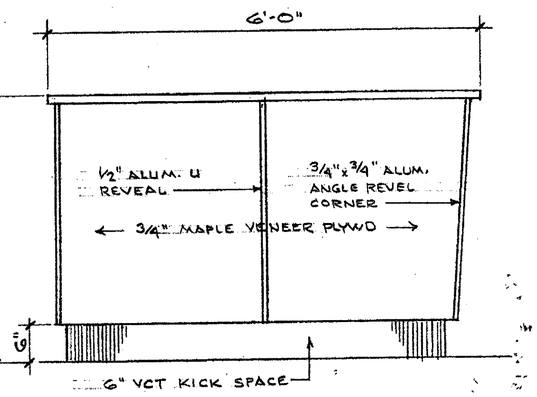

SIDE ELEVATION 3/4"=1'-0"

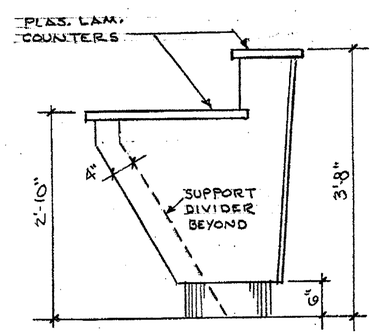

END ELEVATION 3/4"=1'-0"

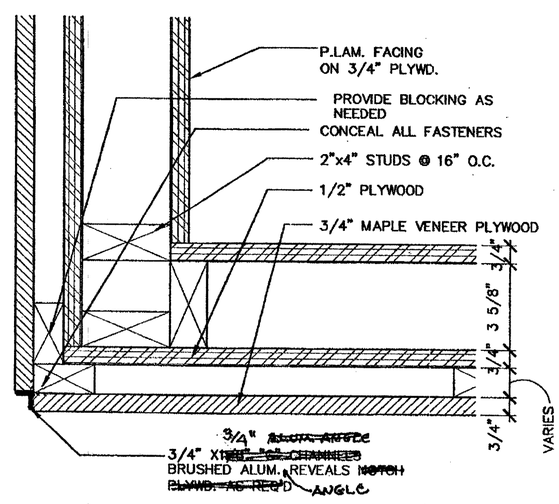

CORNER DETAIL

3"=1'-0"

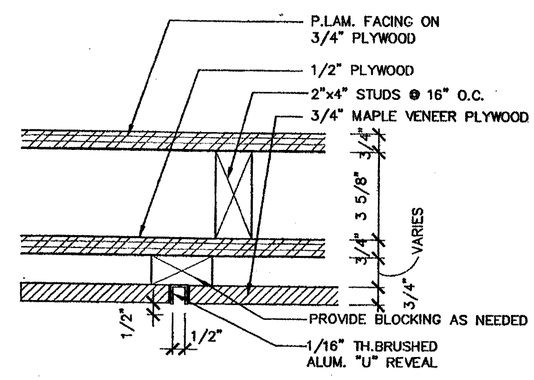

ALUM. REVEAL DETAIL

3" = 1'-0"